CAME

CAME.COM

FA02083-EN

Sliding-gate operators

BY-3500T

INSTALLATION MANUAL

EN English

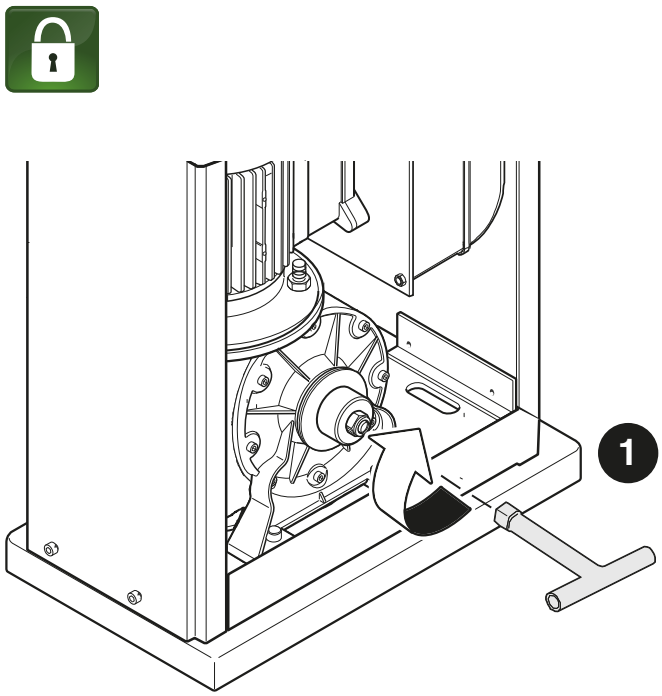
1

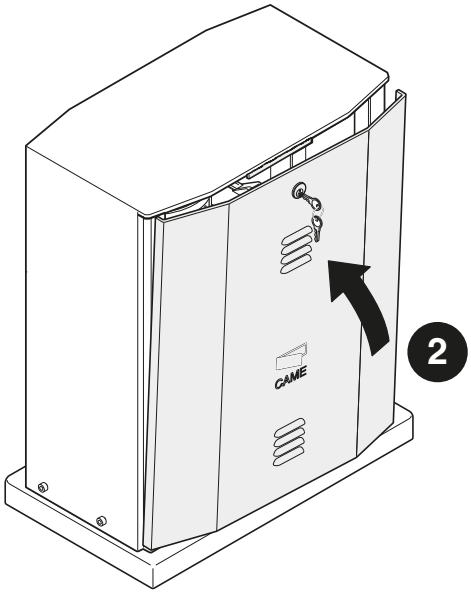
CAME
2

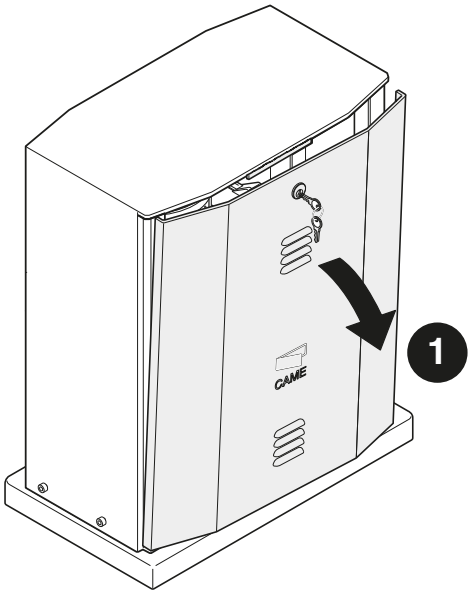
CAME
1

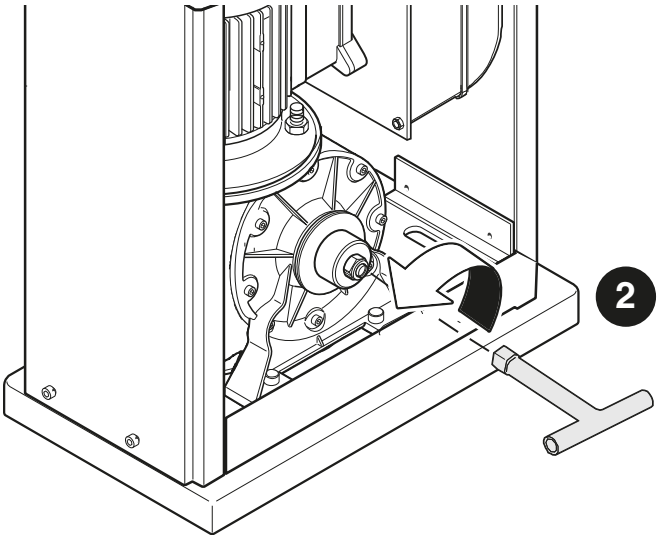
2

GENERAL PRECAUTIONS FOR INSTALLERS

⚠ Important safety instructions.
⚠ Please follow all of these instructions. Improper installation may cause serious bodily harm.
⚠ Before continuing, please also read the general precautions for users.

Only use this product for its intended purpose. Any other use is hazardous. • The manufacturer cannot be held liable for any damage caused by improper, unreasonable or erroneous use. • This product is defined by the Machinery Directive (2006/42/EC) as partly completed machinery. • Partly completed machinery means an assembly which is almost machinery but which cannot in itself perform a specific application. • Partly completed machinery is only intended to be incorporated into or assembled with other machinery or other partly completed machinery or equipment thereby forming machinery to which the Machinery Directive (2006/42/EC) applies. • The final installation must comply with the Machinery Directive (2006/42/EC) and the European reference standards in force. • The manufacturer declines any liability for using non-original products, which would also void the warranty. • All operations indicated in this manual must be carried out exclusively by skilled and qualified personnel and in full compliance with the regulations in force. • The device must be installed, wired, connected and tested according to good professional practice, in compliance with the standards and laws in force. • Make sure the mains power supply is disconnected during all installation procedures. • Check that the temperature ranges given are suitable for the installation site. • Do not install on slopes i.e. any surfaces that are not perfectly level. • Do not install the operator on surfaces that could yield and bend. If necessary, add suitable reinforcements to the anchoring points. • Make sure that no direct jets of water can wet the product at the installation site (sprinklers, water cleaners, etc.). • Make sure you have set up a suitable dual-pole cut-off device along the power supply that is compliant with the installation rules. It should completely cut off the power supply according to category III surcharge conditions. • Demarcate the entire site properly to prevent unauthorised personnel from entering, especially minors. • In case of manual handling, have one person for every 20 kg that needs hoisting; for non-manual handling, use proper hoisting equipment in safe conditions. • Use suitable protection to prevent any mechanical hazards due to persons loitering within the operating range of the operator. • The electrical cables must pass through special pipes, ducts and cable glands in order to guarantee adequate protection against mechanical damage. • The electrical cables must not touch any parts that may overheat during use (such as the motor and transformer). • Before installation, check that the guided part is in good mechanical condition, and that it opens and closes correctly. • The product cannot be used to automate any guided part that includes a pedestrian gate, unless it can only be enabled when the pedestrian gate is secured. • Make sure that nobody can become trapped between the guided and fixed parts, when the guided part is set in motion. • Use additional protection to prevent your fingers from being crushed between the pinion and rack. • All fixed controls must be clearly visible after installation, in a position that allows the guided part to be directly visible, but far away from moving parts. In the case of a hold-to-run control, this must be installed at a minimum height of 1.5 m from the ground and must not be accessible to the public. • Where operated with a hold-to-run control, install a STOP button to disconnect the main power supply to the operator, to block movement of the guided part. • If not already present, apply a permanent tag that describes how to use the manual release mechanism close to it. • Make sure that the operator has been properly adjusted and that the safety and protection devices and the manual release are working properly. • Before handing over to the final user, check that the system complies with the harmonised standards and the essential requirements of the Machinery Directive (2006/42/EC). • Any residual risks must be indicated clearly with proper signage affixed in visible areas, and explained to end users. • Put the machine's ID plate in a visible place when the installation is complete. • If the power-supply cable is damaged, it must be immediately replaced by the manufacturer or by an authorised technical assistance centre, or in any case, by qualified staff, to prevent any risk. • Keep this manual inside the technical folder along with the manuals of all the other devices used for your automation system. • Make sure to hand over to the end user all the operating manuals of the products that make up the final machinery. • The product, in its original packaging supplied by the manufacturer, must only be transported in a closed environment (railway carriage, containers, closed vehicles). • If the product malfunctions, stop using it and contact customer services at https://www.came.com/global/en/contact-us or via the telephone number on the website. • The manufacture date is provided in the production batch printed on the product label. If necessary, contact us at https://www.came.com/global/en/contact-us. • The general conditions of sale are given in the official CAME price lists.

Main points of danger for people

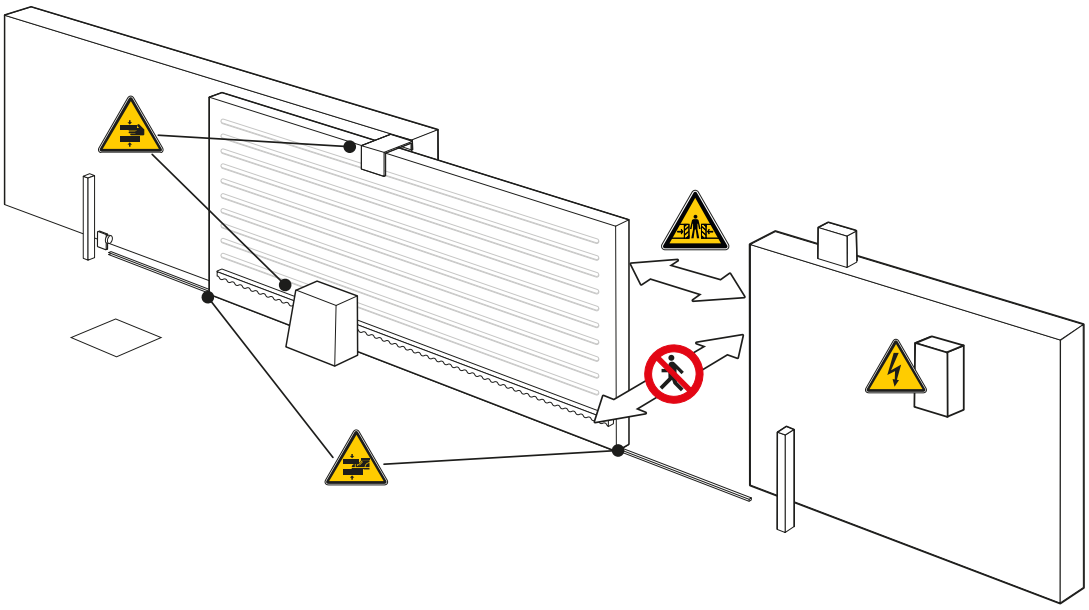

No transiting while the barrier is moving.

Danger of crushing.

Risk of trapping hands.

Risk of trapping feet.

DISMANTLING AND DISPOSAL

CAME S.p.A. employs an Environmental Management System at its premises. This system is certified and compliant with the UNI EN ISO 14001 standard to ensure that the environment is respected and safeguarded. Please continue safeguarding the environment. At CAME we consider it one of the fundamentals of our operating and market strategies. Simply follow these brief disposal guidelines:

DISPOSING OF THE PACKAGING

The packaging materials (cardboard, plastic, etc.) can be disposed of easily as solid urban waste, separated for recycling.

Before dismantling and disposing of the product, please always check the local laws in force.

DISPOSE OF THE PRODUCT RESPONSIBLY

DISPOSING OF THE PRODUCT

Our products are made of various materials. Most of these materials (aluminium, plastic, iron and electrical cables) are classified as solid urban waste. They can be separated for recycling and disposed of at authorised waste treatment plants.

Other components (electronic boards, transmitter batteries, etc.) may contain pollutants.

These must be removed and disposed of by an authorised waste disposal and recycling firm.

It is always advisable to check the specific laws that apply in your area.

DISPOSE OF THE PRODUCT RESPONSIBLY

Key

📖 This symbol shows which parts to read carefully.

⚠ This symbol shows which parts describe safety issues.

📖 The measurements, unless otherwise stated, are in millimetres.

Description

001BY-3500T

BY3500T - Operator with 400 V AC three-phase motor, complete with control board and mechanical limit switches for sliding gates up to 3500 kg in weight and 17 m in length.

Intended use

Industrial sliding gate solution

📖 For end installations NOT falling within the scope of Regulation (EU) 2023/826.

📖 Any installation and/or use other than that specified in this manual is forbidden.

Description of parts

Operator

1. Cabinet
2. Gearmotor
3. Control panel
4. Keys for the inspection door
5. Inspection hatch
6. Anchoring plate
7. Anchoring bracket
8. Fixtures and fittings
9. Nut for unlocking the operator
10. Limit-switch tabs
11. Release key

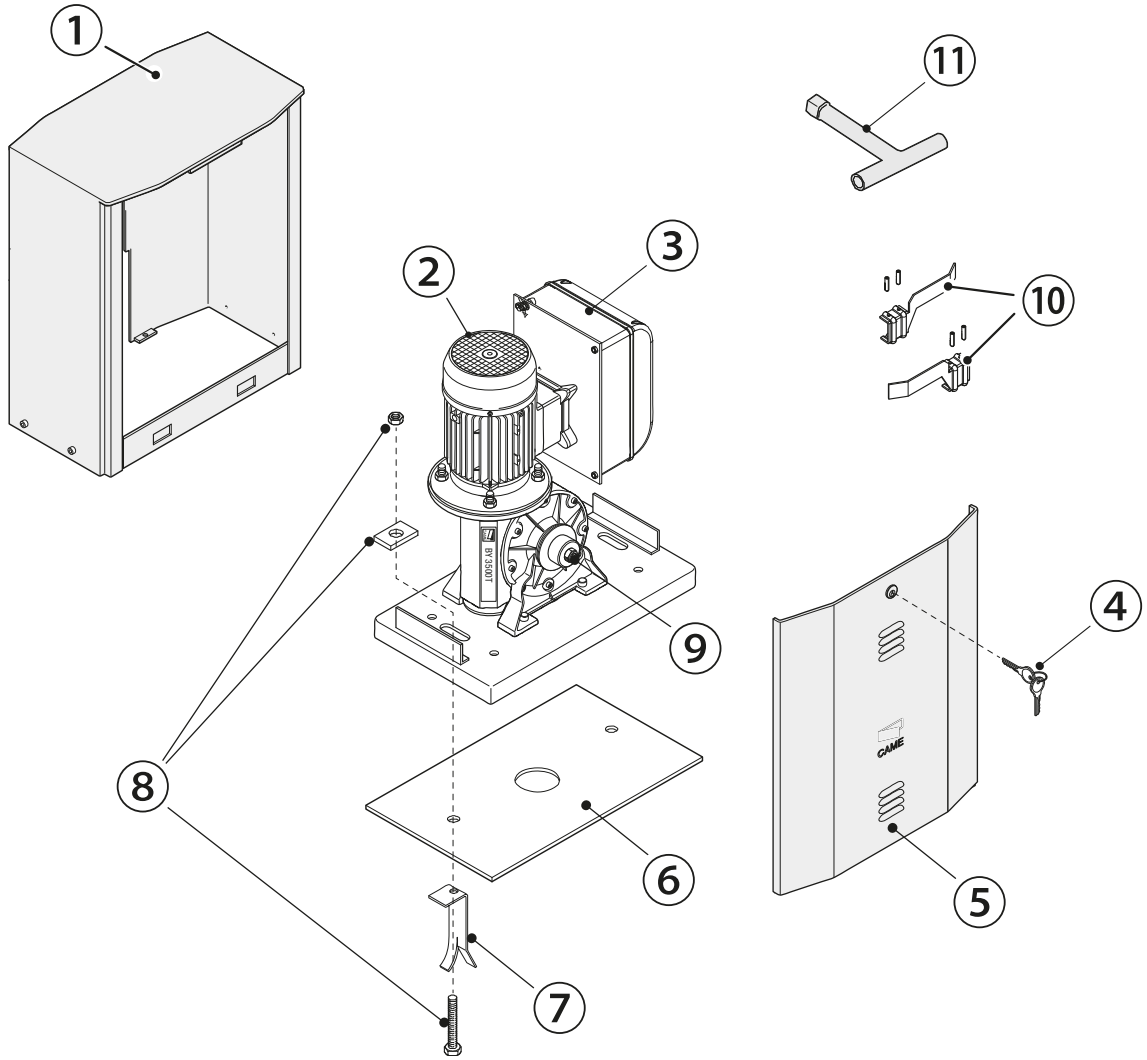

Size

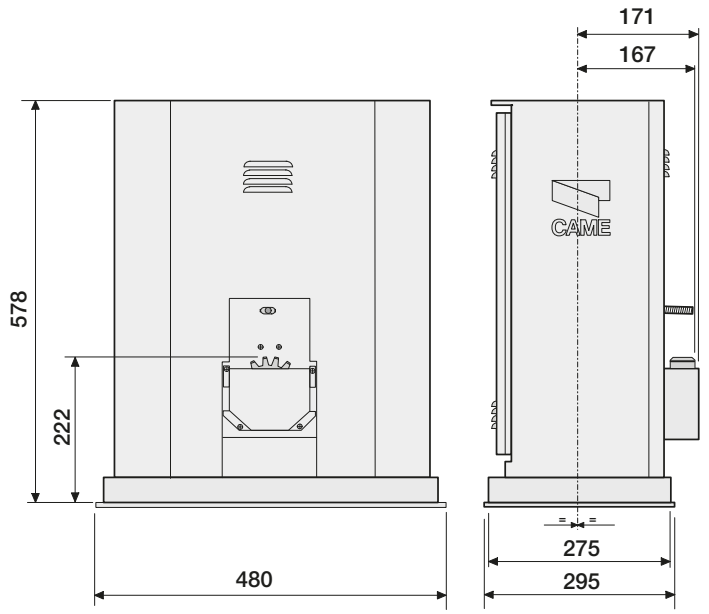

Usage limitations

MODELS	BY-3500T
Maximum gate-leaf length (m)	17
Maximum gate-leaf weight (kg)	3500

Technical data

MODELS	BY-3500T
Power supply (V - 50/60 Hz)	230 - 400 AC THREE PHASE
Motor power supply (V)	230 - 400 AC THREE PHASE
Standby consumption (W)	2,1
Power (W)	1000
Maximum current draw (A)	8
Colour	RAL 7035
Operating temperature (°C)	-20 ÷ +55
Thrust (N)	3500
Maximum operating speed (m/min)	10,5
Operating time (s)	360
Cycles/hour	8
Motor thermal protection (°C)	140
Pinion module	6
Reduction ratio	28
Protection rating (IP)	54
Insulation class	I
Weight (kg)	74
Storage temperature (°C) *	-25 ÷ +70
Average life (cycles) **	150000

(*) Before installing the product, keep it at room temperature where it has previously been stored or transported at a very high or very low temperature.
(**) The average product life specified should be understood purely as an indicative estimate. It applies to normal usage conditions and where the product has been installed and maintained in compliance with the instructions provided in the CAME technical manual. The average product life is also affected, including significantly, by other variables such as, but not limited to, climatic and environmental conditions (where present, see the MCBF table). The average product life should not be confused with the product warranty.

⚠ The operating cycle calculation considers a gate that is of standard length (the sliding part), professionally installed, free of any mechanical issues and/or accidental friction points, and measured at an ambient temperature of 20°C, as stated in EN standard 60335-2-103.

Fuse table

MODELS	BY-3500T
Line fuse	8 A FAST
Control-board fuse	630 mA FAST
Accessories fuse	2 A FAST

📖 The line fuses are 3, one for each phase.

Cable types and minimum thicknesses

Cable length (m)	up to 20	from 20 to 30
400 V AC THREE-PHASE power supply	4G x 1.5 mm2	4G x 2.5 mm2
400 V AC THREE-PHASE motor power supply	4G x 1.5 mm2	4G x 2.5 mm2
Micro limit switches	* no. x 0.5 mm2	* no. x 0.5 mm2
24 V AC Flashing light	2 x 1 mm2	2 x 1 mm2
Flashing beacon 230 V AC	2 x 1.5 mm2	2 x 1.5 mm2
TX Photocells	2 x 0.5 mm2	2 x 0.5 mm2
RX photocells	4 x 0.5 mm2	4 x 0.5 mm2
Command and control devices	* no. x 0.5 mm2	* no. x 0.5 mm2

* no. = see product assembly instructions - Warning: the cable cross-section is indicative and varies according to the motor power and cable length.

📖 When operating at 230 V / 400 V and outdoors, use H05RN-F-type cables that are 60245 IEC 57 (IEC) compliant; when indoors, use H05VV-F-type cables that are 60227 IEC 53 (IEC) compliant. For power supplies up to 48 V, use FROR 20-22 II cables compliant with standard EN 50267-2-1 (CEI).

📖 To connect the antenna, use RG58 cable (up to 5 m).

📖 If the cable lengths differ from those specified in the table, define the cable cross-sections according to the actual power draw of the connected devices and in line with regulation CEI EN 60204-1.

📖 For multiple, sequential loads along the same line, recalculate the values in the table according to the actual power draw and distances. For information on connecting products not covered in this manual, please see the documentation accompanying the products themselves.

Control board

📖 All connections are protected by quick fuses.

⚠ For the system to work properly, before fitting any plug-in card, DISCONNECT THE MAIN POWER SUPPLY and remove any batteries.

⚠ Before working on the control panel, disconnect the mains power supply and remove the batteries, if any.

1. Terminal block for connecting the transformer and contactors
2. Accessories fuse
3. Control board fuse
4. Programming buttons
5. TCA Trimmer: automatic closing time adjustment
6. PAR.OP Trimmer: partial opening adjustment
7. Power LED
8. DIP for programming
9. Terminal block for connecting the soft starter
10. Alert LED
11. Connector for plug-in radio frequency card (AF)
12. Terminal board for connecting the antenna
13. Terminal block for connecting the control, safety and motor devices
14. Terminal board for limit-switch micro-switches
15. Power supply terminal board
16. Line fuse

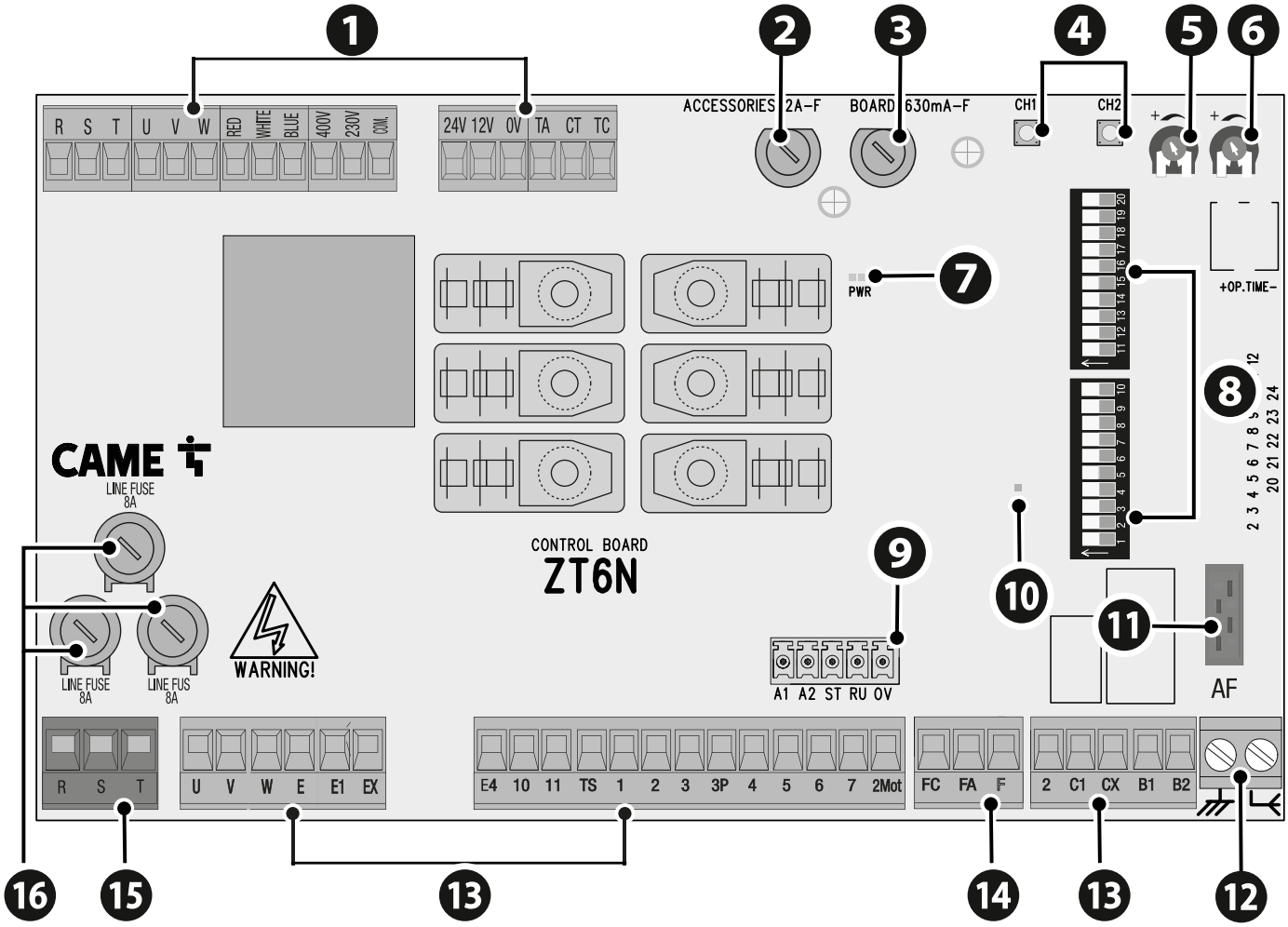

INSTALLATION

The following illustrations are examples only. The space available for fitting the operator and accessories varies depending on the area where it is installed. It is up to the installer to find the most suitable solution.

The drawings show an operator fitted on the left.

Preliminary operations

Dig a hole for the foundation frame.
Set up the corrugated tubes needed for the wiring coming out of the junction pit.

To connect the gearmotor we suggest a Ø 60 mm corrugated tube. Whereas for the accessories we suggest Ø 25 mm tubes.

The number of tubes depends on the type of system and the accessories that are going to be fitted.

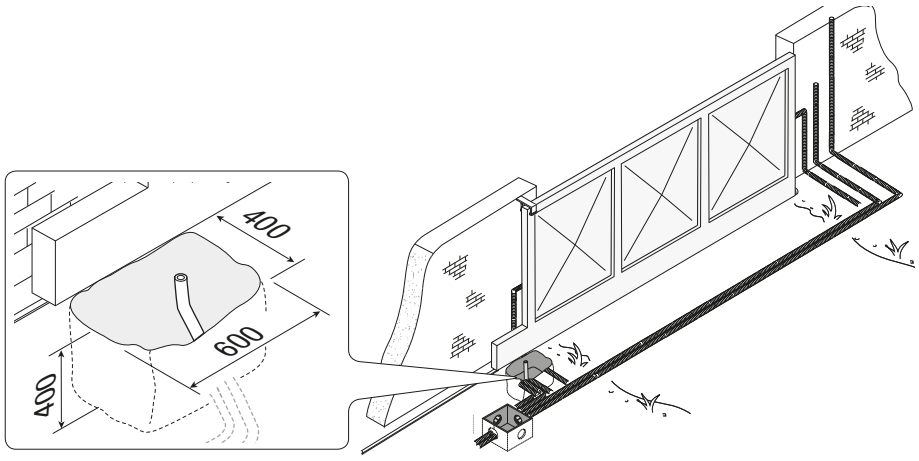

Laying the anchoring plate

Set up a foundation frame that is larger than the anchoring plate.
Insert the foundation frame into the dug hole.

The foundation frame must protrude by 50 mm, above ground level.

Fit an iron cage in the foundation frame to reinforce the concrete.

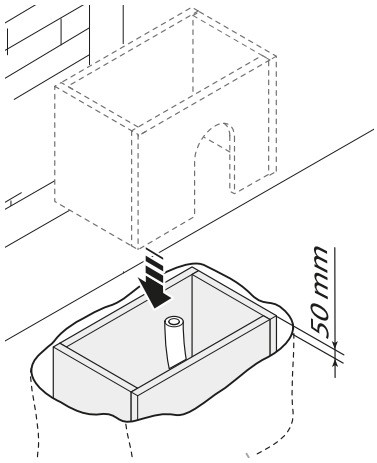

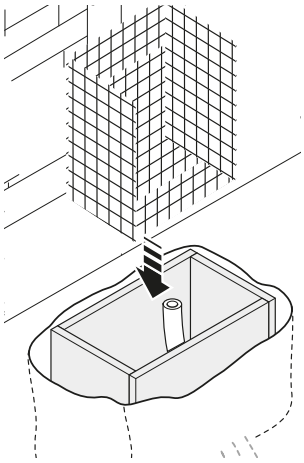

Fasten the anchoring clamps to the plate by using the supplied screws, washers and nuts.
Fit the anchoring plate in the iron cage.

The tubes must pass through the existing holes.

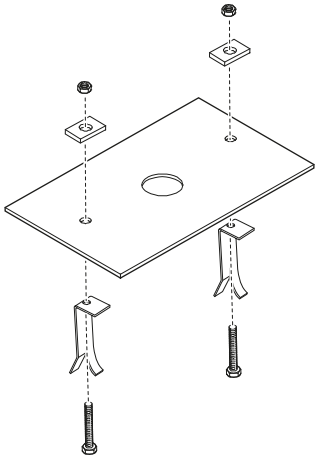

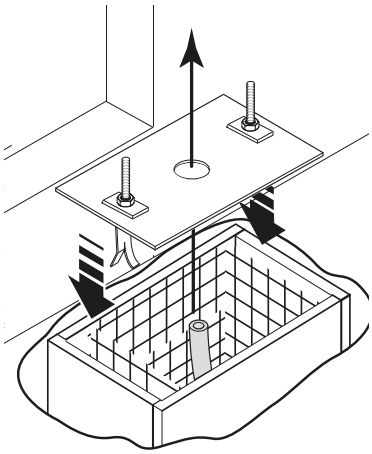

Position the anchoring plate, taking note of the measurements shown in the drawing.

If the gate does not have a rack, proceed with the installation. See the section FASTENING THE RACK.

See the section “FASTENING THE RACK”.
Cast cement into the foundation frame.

The plate must be perfectly level and the screw threads completely above surface.

Wait at least 24 hours for the cement to dry.

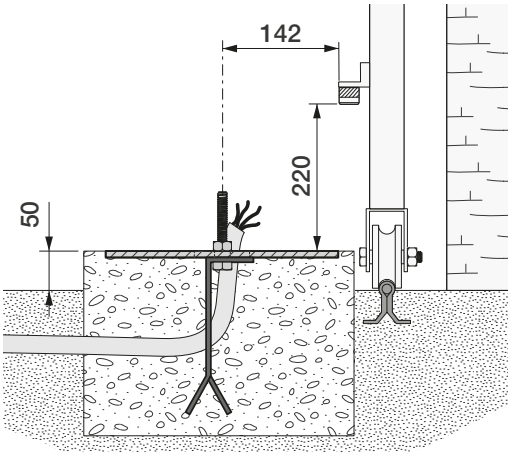

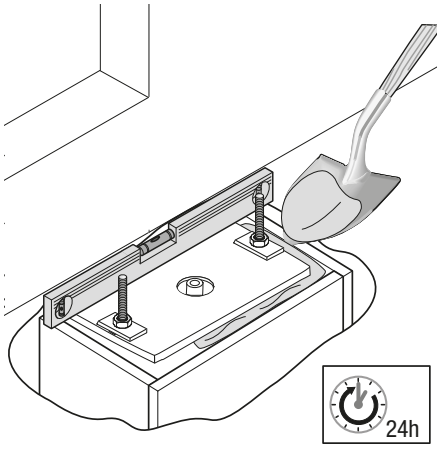

Remove the foundation frame.
Fill the hole with soil around the concrete block.

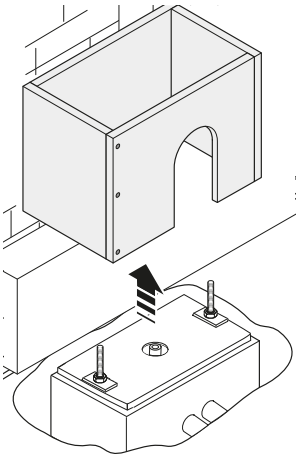

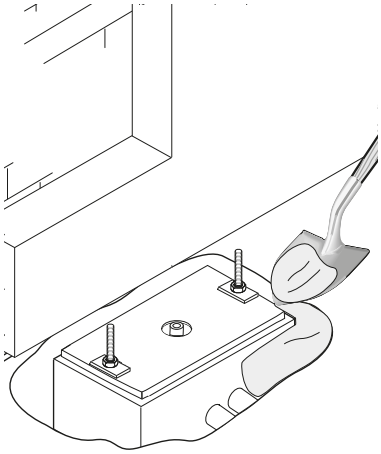

Remove the nuts from the screws.
Insert the electrical cables into the tubes until they protrude by about 600 mm.

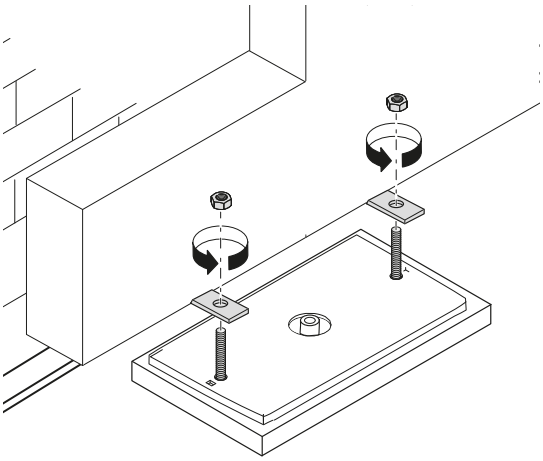

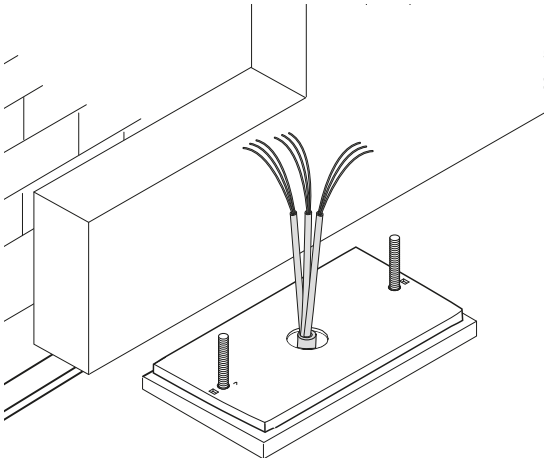

Setting up the operator

❶ Remove the front cover.
❷ Remove the side screws.
❸ Remove the cabinet.

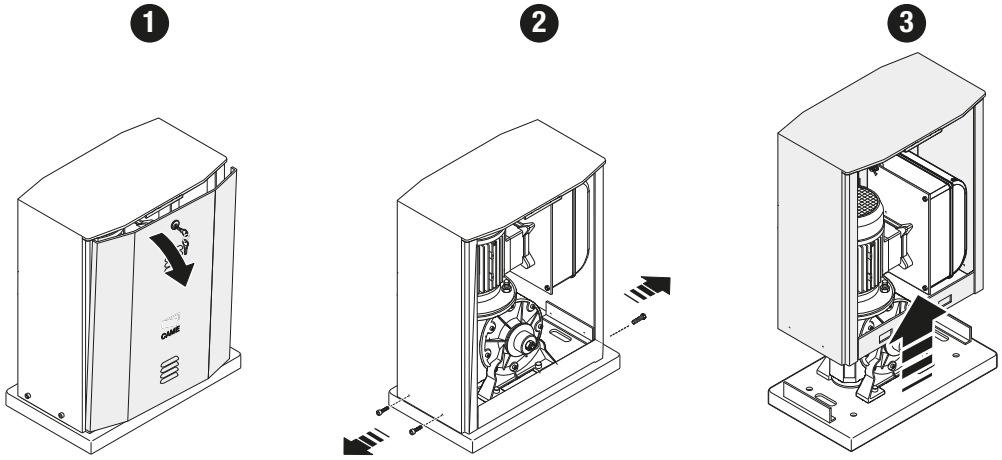

Place the operator on top of the anchoring plate.

📖 The electrical cables must pass under the operator foundation frame

Lift the operator by 5-10 mm from the plate by adjusting the threaded feet, to allow for any adjustments that may need to be made between the rack and pinion.

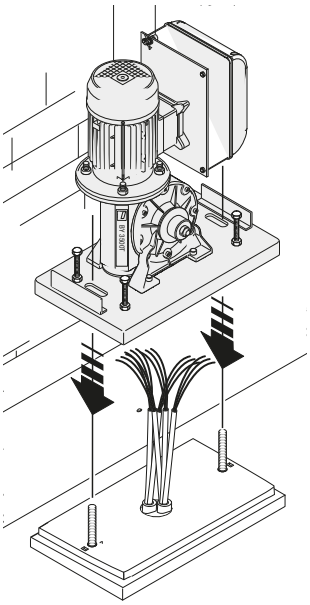

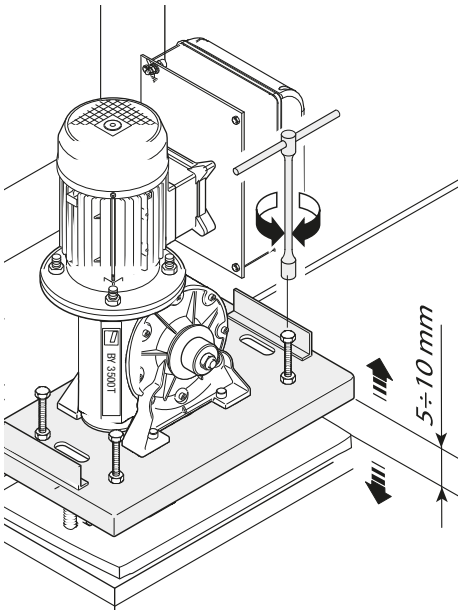

Fastening the rack

❶ Release the operator.
❷ Rest the rack on the pinion.
❸ Weld or fasten the rack to the gate along its entire length.

📖 To assemble the rack modules, use an extra piece and rest it under the joint, then fasten it in place using two clamps.

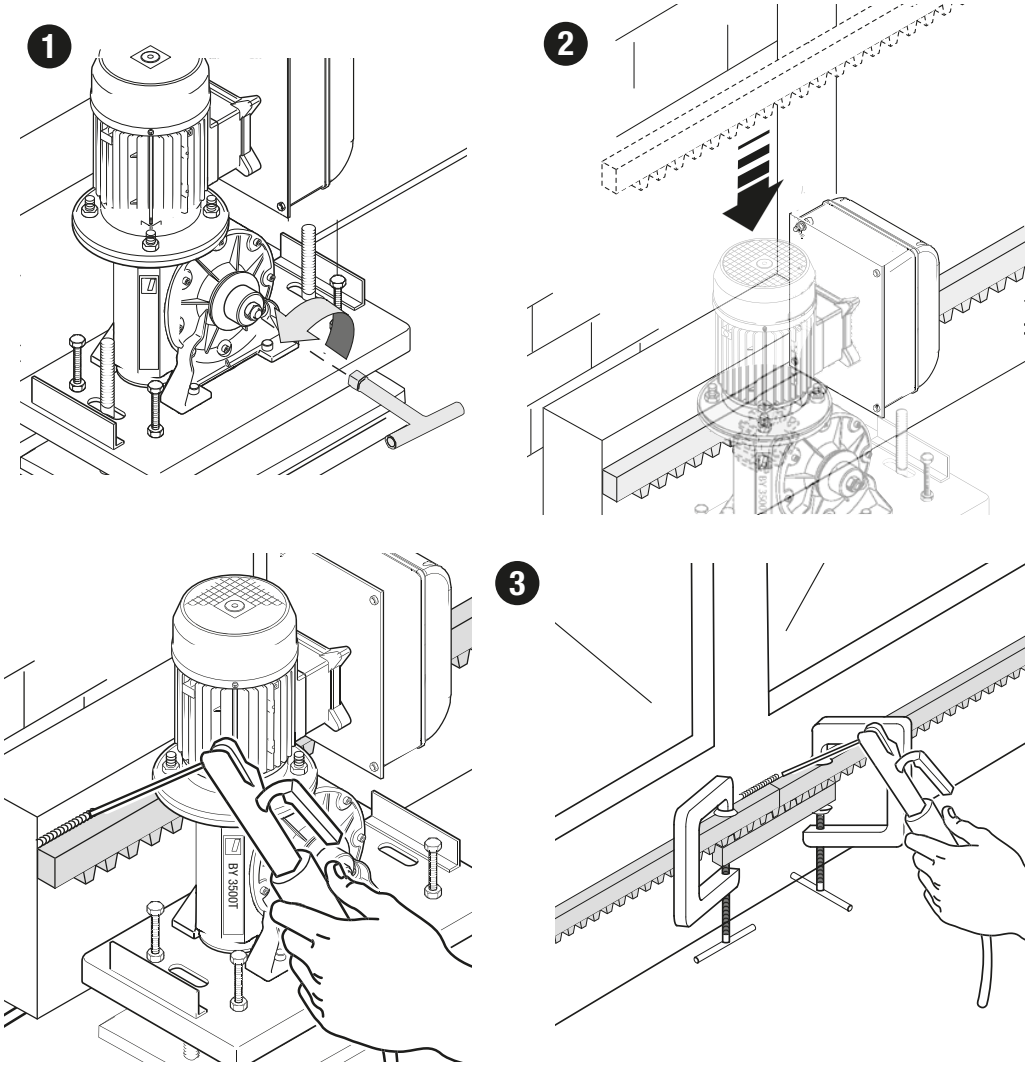

Adjusting the pinion-rack coupling

Open and close the gate manually.
Adjust the pinion-rack coupling distance using the threaded feet (vertical adjustment) and the holes (horizontal adjustment).

The weight of the gate must not bear down upon the operator.

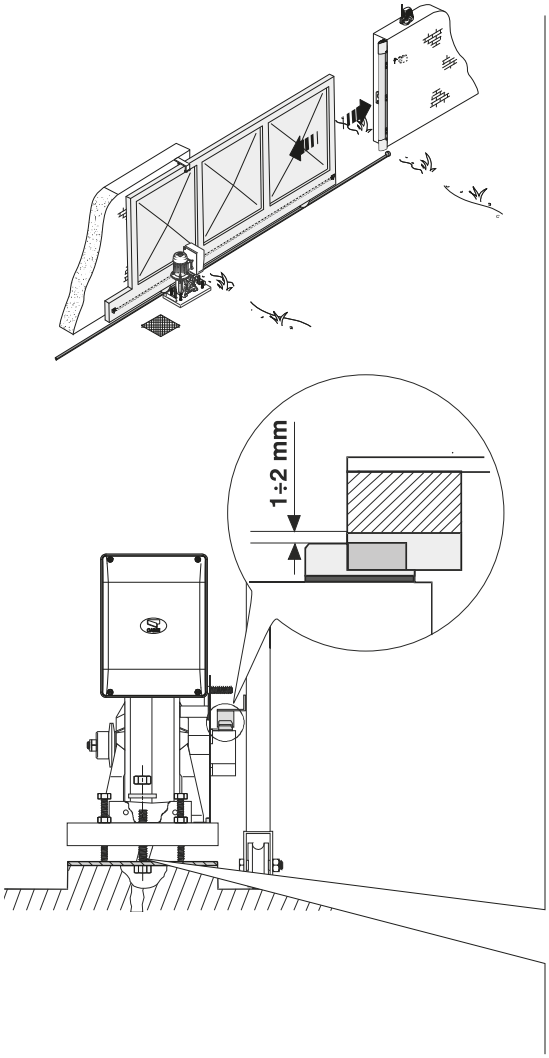

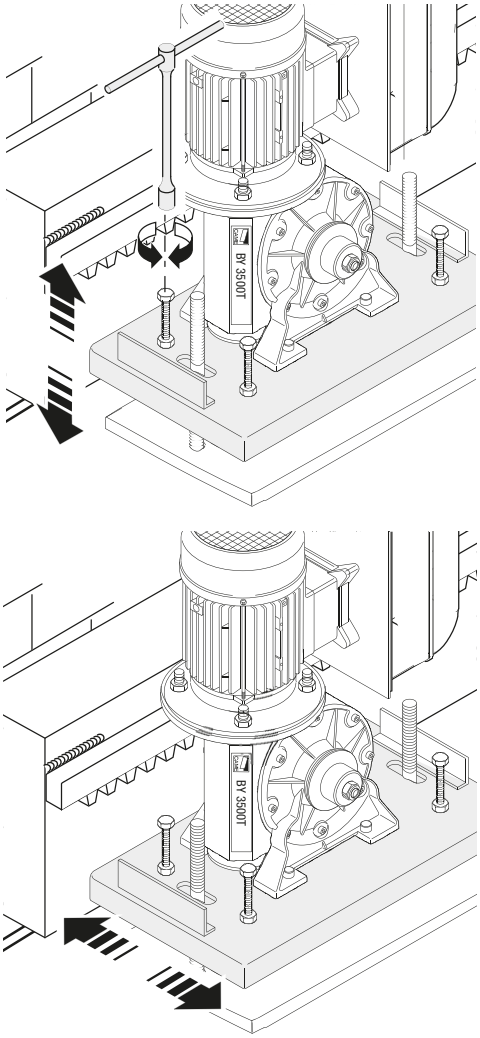

Fastening the operator in place

Only fasten the operator after adjusting the pinion-rack coupling.
Fasten the operator to the anchoring plate using stoppers and nuts.

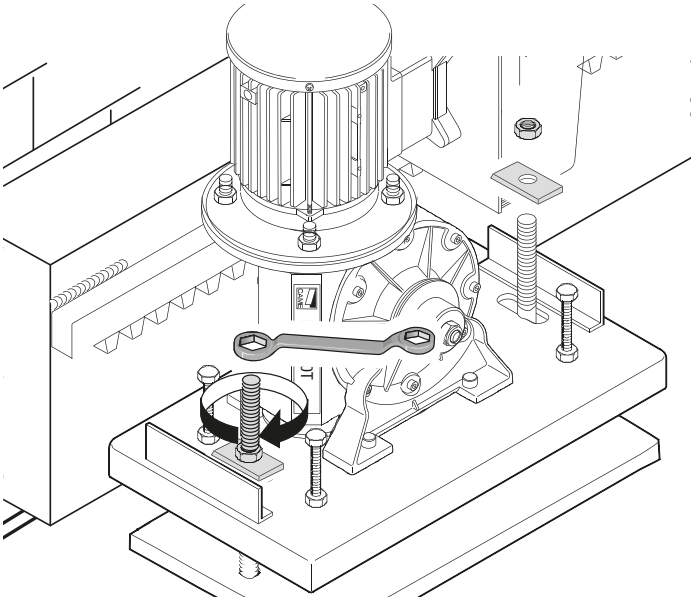

Determining the travel end points with mechanical limit switches

❶ Open the gate.
Insert the opening limit-switch tab in the rack.
The spring must trigger the microswitch.
Fasten the opening limit-switch tab using the grub screws supplied.

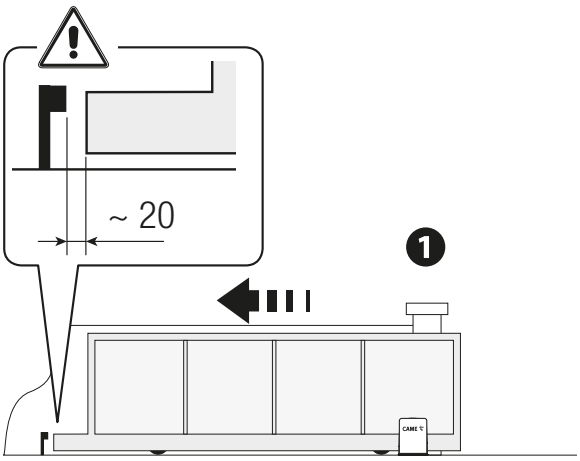

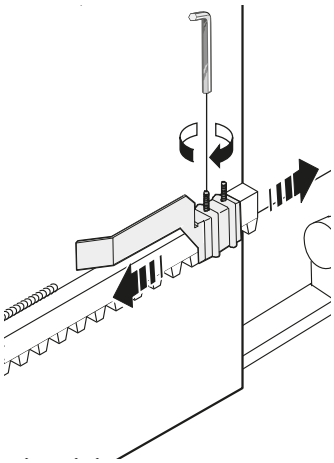

❶ Close the gate.
Insert the closing limit-switch tab in the rack.
The spring must trigger the microswitch.
Fasten the closing limit-switch tab using the grub screws supplied.

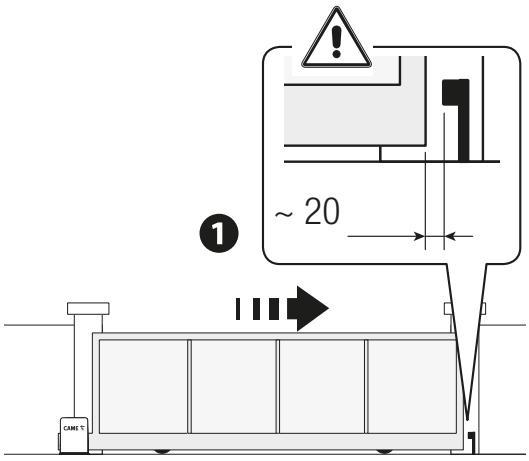

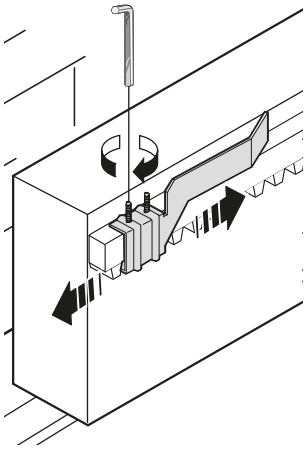

Passing the electrical cables

Connect all wires and cables in compliance with the law.

The electrical cables must not touch any parts that may overheat during use (such as the motor and transformer).

Use cable glands to connect the devices to the control panel. One of these must be used exclusively for the power supply cable.

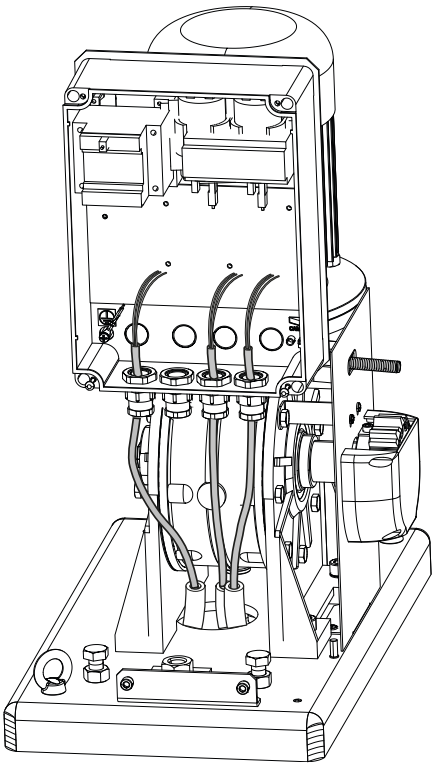

Reversal of the gate opening time

The operator is designed to be fitted on the left.

If installing on the right, reverse the motor and limit switches phases.

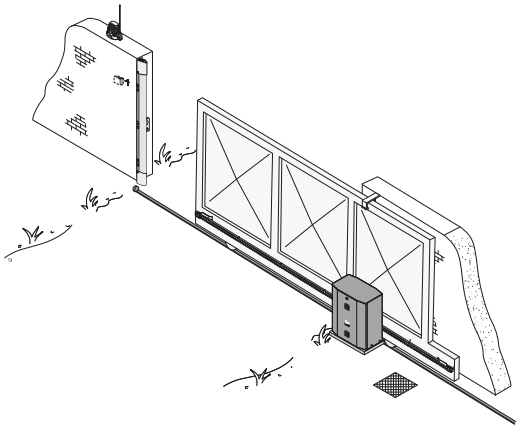

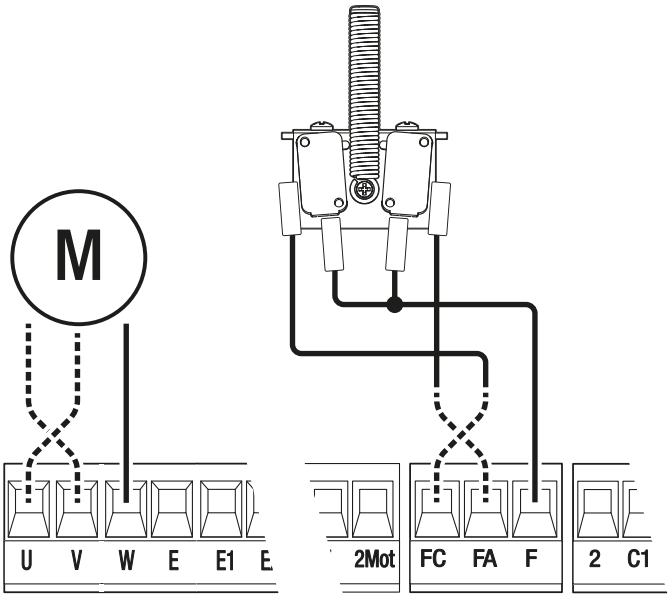

Power supply

Make sure the mains power supply is disconnected during all installation procedures.

⚠ Before working on the control panel, cut off the mains power supply.

Connecting to the mains (400 V AC - three-phase - 50/60 Hz)

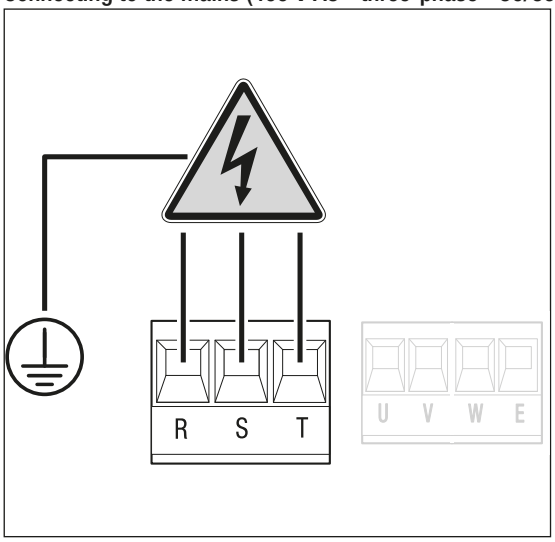

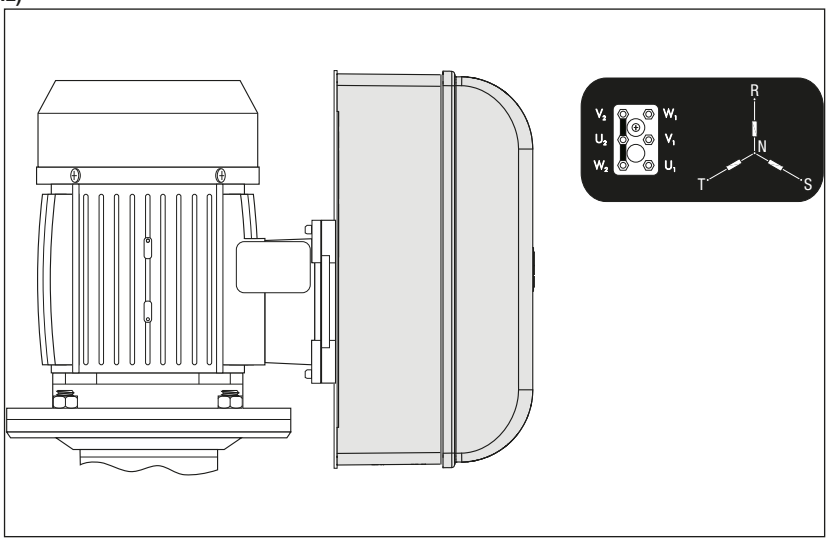

Connecting accessories

Power supply output for accessories 24 V

📖 The total power of the outputs listed below must not exceed the maximum output power [Accessories]

Device	Output	Power supply (V)	Maximum power (W)
Accessories	10 - 11	24 AC	45
Flashing beacon	E4 -10	24 AC	45
Operator status warning light (open)	11 - 5	24 AC	3
Operator status warning light (closed)	11 - 6	24 AC	3

Power supply output for accessories 230 V

Device	Output	Power supply (V)	Maximum power (W)
Flashing beacon	E - E1	230 AC	25
Additional light	E - EX	230 AC	60

Command and control devices

1
2

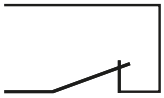

STOP button (NC contact)
This stops the operator and excludes automatic closing. Use a control device to resume movement.
📖 See function [Total stop].

2
3

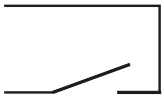

Control device (NO contact)
Open command
📖 When the [Hold-to-run] function is active, a control device must be set to OPEN.

2
3P

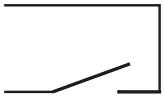

Control device (NO contact)
Partial Opening command

2
4

Control device (NO contact)
Close command
📖 When the [Hold-to-run] function is active, a control device must be set to CLOSE.

2
7

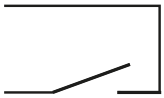

Control device (NO contact)
Step-by-step command
Sequential command
📖 See DIP switch 2 settings.

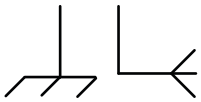

Antenna with RG58 cable
Use this terminal to connect the antenna.

Signalling devices

E
EX

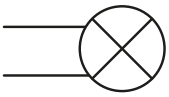

Additional flashing beacon
It increases the light in the manoeuvring area.

E
E1

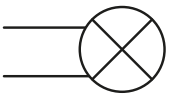

Flashing beacon (230 V)
It flashes when the operator opens and closes.

E4
10

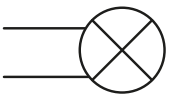

Flashing beacon (24 V)
It flashes when the operator opens and closes.

11
5

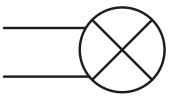

Operator status warning light (OPEN)
It increases the light in the manoeuvring area.

11
6

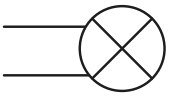

Operator status warning light (CLOSED)
It increases the light in the manoeuvring area.

Photocells and sensitive edges

Connect the safety devices to the C1 and/or CX inputs.
During programming, configure the type of action that must be performed by the device connected to the input.

If used, the contacts C1 CX must be configured during programming.

For systems with multiple pairs of photocells, please see the manual for the relevant accessory.

❶ Standard connection

❷ Connection with safety test

DIR photocells

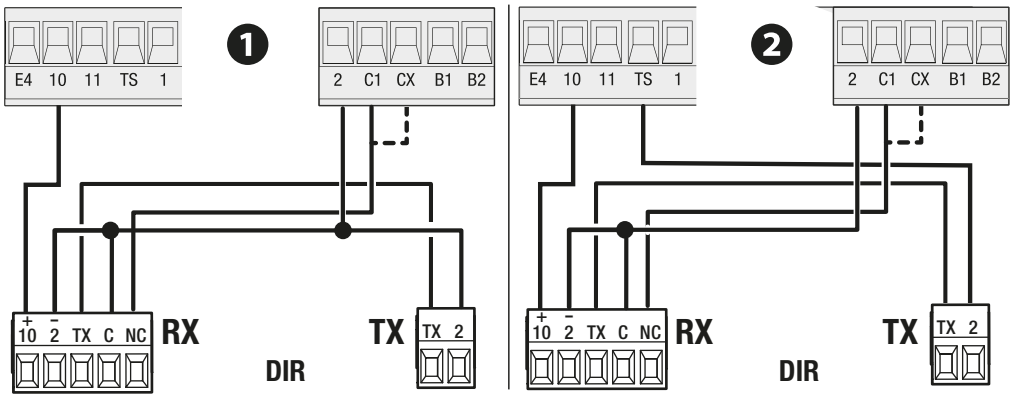

DXR / DLX photocells

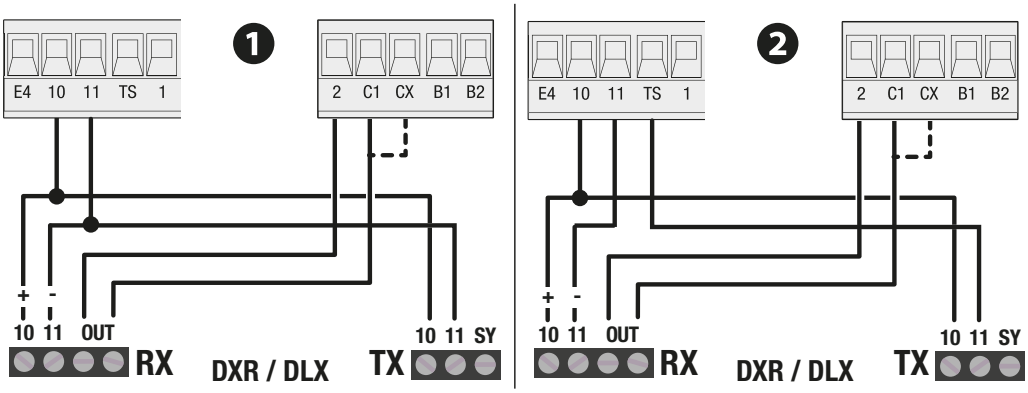

DFWN sensitive edge

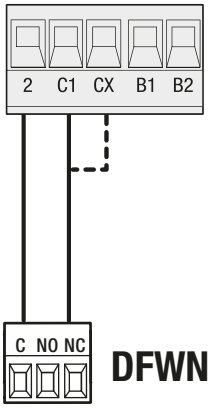

SOFT START

The maximum power of the motor to be connected to the soft starter must not exceed the maximum power of the board.

A Gearmotor input
B Gearmotor output
C Commands and soft starter power supply terminal block connections

① + 24 V DC power supply connection
② GND power supply connection
③ START connection
④ ON RUN connection (optional)
⑤ OVERLOAD connection (optional)

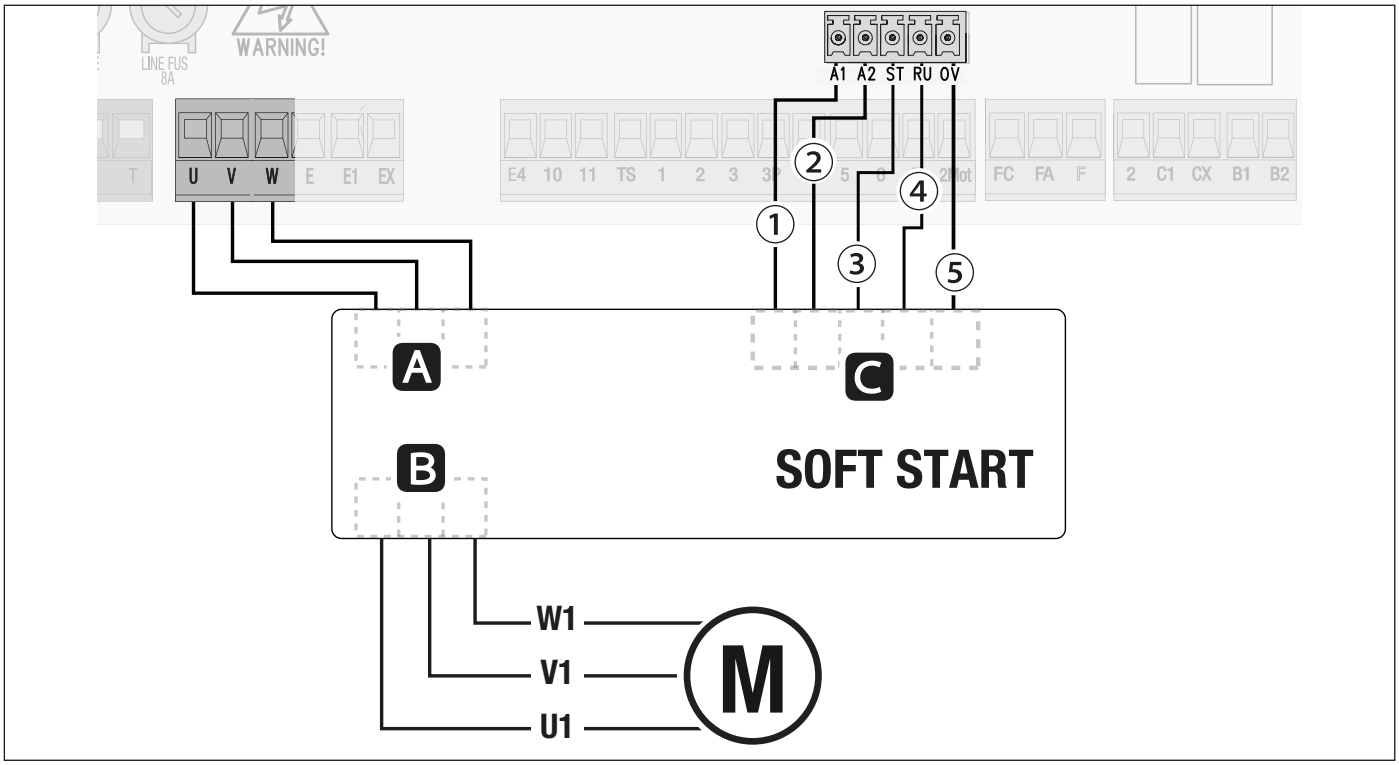

Usage limitations

Power supply voltage	Motor contact power
24 V AC/DC	3000 W (400 V 3~)

3RW3014-1BB04 SIEMENS soft starter connection

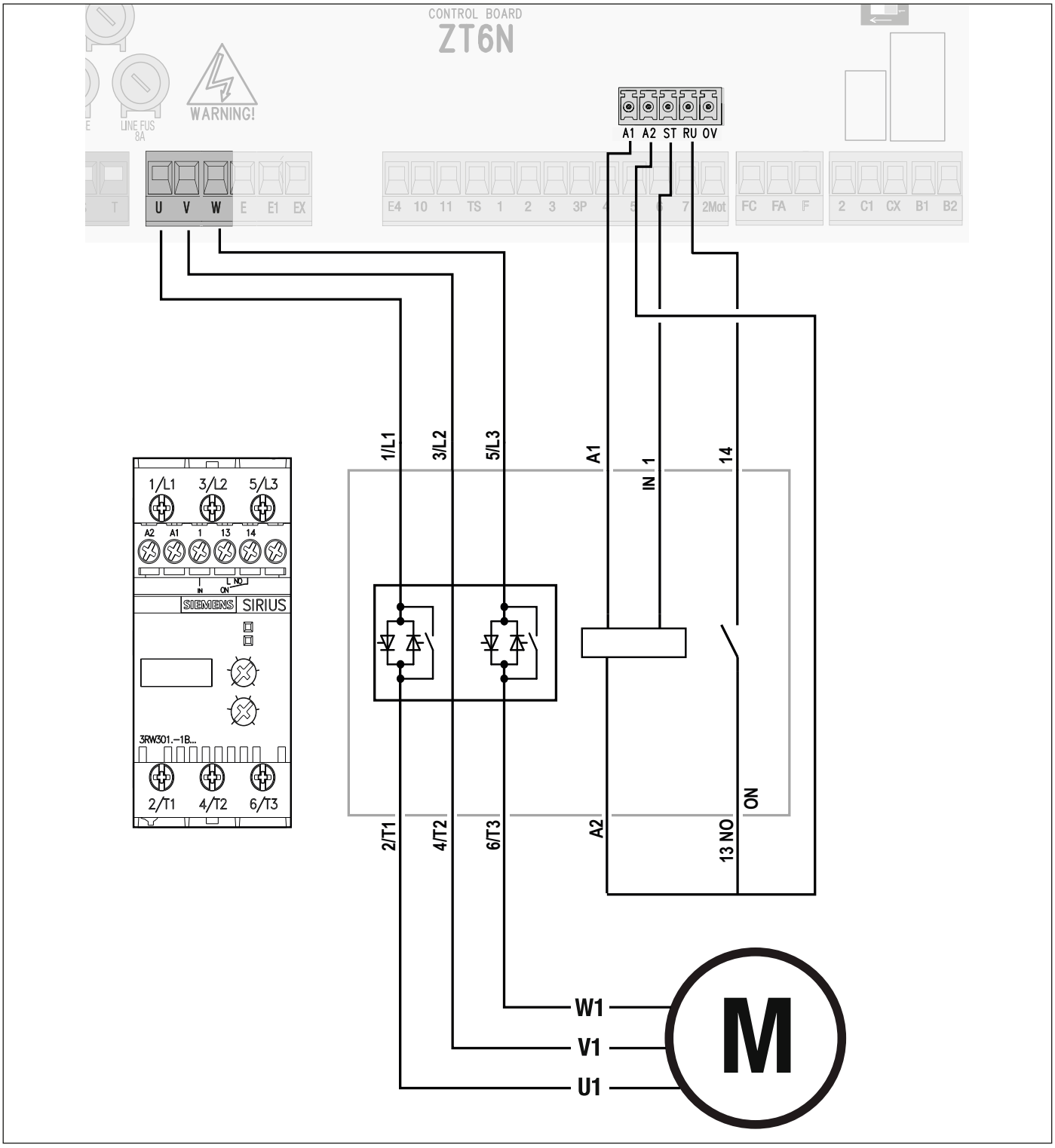

Function of the DIP switch

DIP switches	FUNCTION
1	Automatic closure
2	Sequential and step-by-step command
3	Open command
4	Hold-to-run
5	Pre-flashing
6	Obstacle with motor stopped
7	Input C1
8	CX input
9	CX input
10	Total stop
11	[do not use, keep OFF]
12	Partial opening
13	Safety devices test
14	Input C1
15	CX input
16	Additional light
17	Additional light
18	Support brake
19	[do not use, keep OFF]
20	[do not use, keep OFF]

Functions menu

DIP-switch 1 ON	**Automatic closure** The function activates or deactivates automatic closure. 📖 The function does not work if any of the safety devices are triggered when an obstacle is detected, or after a complete stop, or during a power outage. 📖 To adjust the automatic closing time, see [Settings].
DIP-switch 2 ON	**Sequential** Enable sequential command from control device (2-7) and transmitter. 📖 Sequential - The first command is to open, the second to STOP, the third to close and the fourth to STOP.
DIP-switch 2 OFF	**Step-by-step** Enable step-by-step command from control device (2-7) and transmitter. 📖 Step-by-step - The first command is to open and the second to close.
DIP-switch 3 ON	**Open** Enable the opening command from the transmitter.
DIP-switch 4 ON	**Hold-to-run** With the function active, the operator stops moving (opening or closing) when the control device is released. 📖 When the function is active, it excludes all other control devices, input 2-7 and AF card operation.
DIP-switch 5 ON	**Pre-flashing** Use this function to activate the flashing beacon 5 seconds before any manoeuvre.
DIP-switch 6 ON	**Obstacle with motor stopped** With the function active, the gate remains idle if the safety devices detect an obstacle.

Input C1
Associate a function with input C1.

📖 If the devices are not connected to the 2-C1 terminal, set DIP switch 7 to ON.

DIP-switch 7 OFF DIP-switch 14 OFF	**C1** Reopen while closing (photocells).
DIP-switch 7 OFF DIP 14 ON	**C1 = r7** Reopen while closing (sensitive edges with 8K2 resistor). 📖 The safety devices test does not detect this input.

CX input
Associate a function with the CX input.

📖 If the devices are not connected to the 2-CX terminal, set DIP switch 8 to ON.

DIP 8 OFF DIP 9 OFF DIP-switch 15 OFF	**CX = C2** Reclose while opening (Photocells)
DIP 8 OFF DIP 9 OFF DIP 15 ON	**CX = r7** Reopen while closing (sensitive edges with 8K2 resistor). 📖 The safety devices test does not detect this input.
DIP 8 OFF DIP 9 ON DIP-switch 15 OFF	**CX = C3** Partial stop (Photocells)
DIP 8 OFF DIP 9 ON DIP 15 ON	**CX = r8** Reclose while opening (sensitive edges with 8K2 resistor). 📖 The safety devices test does not detect this input.

DIP 10 ON	**Total stop** Deactivate input 2-1. If DIP switch 10 is set to OFF, the input is used as a normally closed contact. 📖 With the input open, this function excludes all commands, including any automatic closing.

Partial opening

📖 To adjust partial opening, see [Settings].

DIP-switch 12 ON	After a partial opening command, automatic closing is fixed at 8 seconds
DIP-switch 12 OFF	After a partial opening command, automatic closing can be adjusted from the trimmer. 📖 Only with automatic closing active.

DIP-switch 13 ON	**Safety devices test** Check that the photocells connected to the inputs are operating correctly, after each opening and closing command.

Additional light
This function allows you to choose the operating mode of the lighting device connected to the output E - EX.

DIP-switch 16 ON	**Courtesy light** The light switches on when a manoeuvre starts and remains on once the manoeuvre has finished for 330 seconds.
DIP-switch 17 ON	**Cycle lamp** The lamp stays on during the manoeuvre.

DIP 18 ON	**Support brake** Activate brake function during closing. Only use with CBX and CBXT operators.

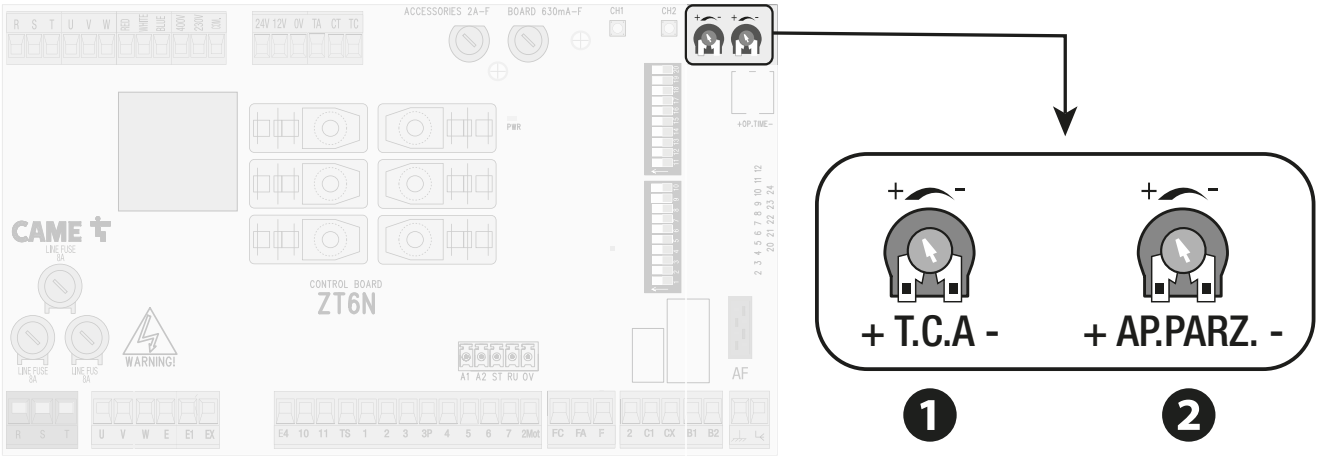

❶ Adjusting automatic closing time

The trimmer is used to set the time before automatic closure, once the opening travel end point has been reached or once the photocells have caused a partial stop [C3].

📖 Set to between 1 and 120 seconds.

❷ Adjusting partial opening

📖 Set to between 1 and 95 seconds.

ENABLING THE RADIO CONTROL

Electrical connections

⚠ Before working on the control panel, disconnect the mains power supply and remove the batteries, if any.

Fit an AF card to the control board using the AF connector.
Connect the RG58 cable to the terminals.
Connect up the electrics for the devices and accessories.

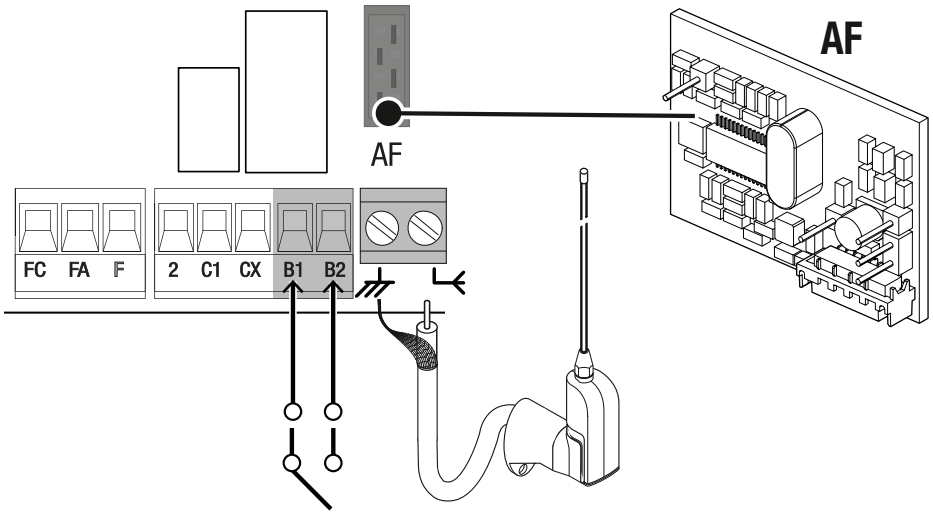

Device	Output	Power supply (V)	Maximum current draw (A)*
Auxiliary contact	B1 - B2	- -	5 (24 V AC/DC)

* resistive loads

Saving users

📖 You can store up to 25 users.

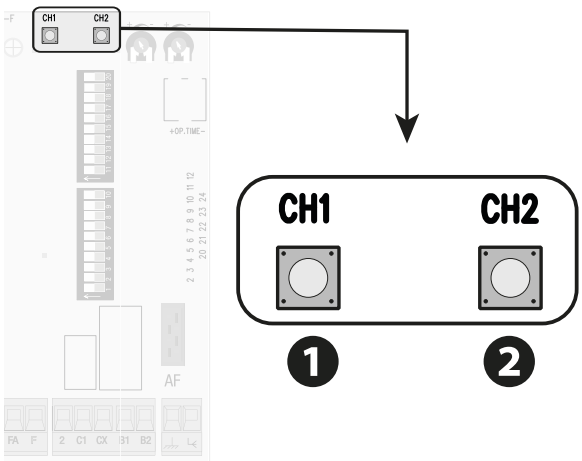

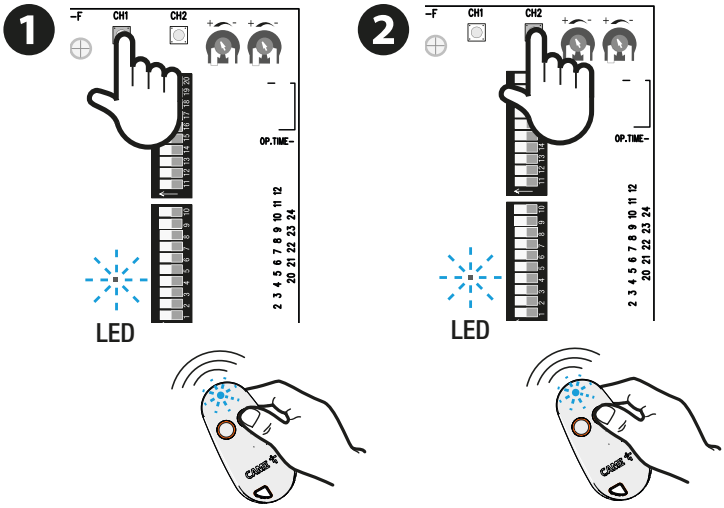

❶ Channel CH1

Channel CH1 is used for gate opening and closing commands.

📖 The command depends on the selections made on DIP switches 2-3. See sequential, step-by-step and open command.

Press and hold the CH1 button.

📖 The LED flashes.

Press a button on the transmitter.

❷ Channel CH2

Channel CH2 is used for controlling the accessory device connected to B1-B2.
Press and hold the CH2 button.

📖 The LED flashes.

Press a second button on the transmitter.

Deleting all users

Press and hold buttons CH1 and CH2 at the same time for more than 5 seconds, until the PROG LED stays on.

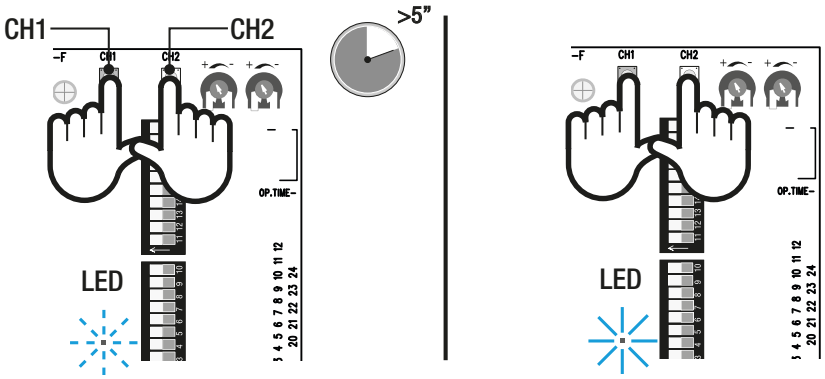

FINAL OPERATIONS

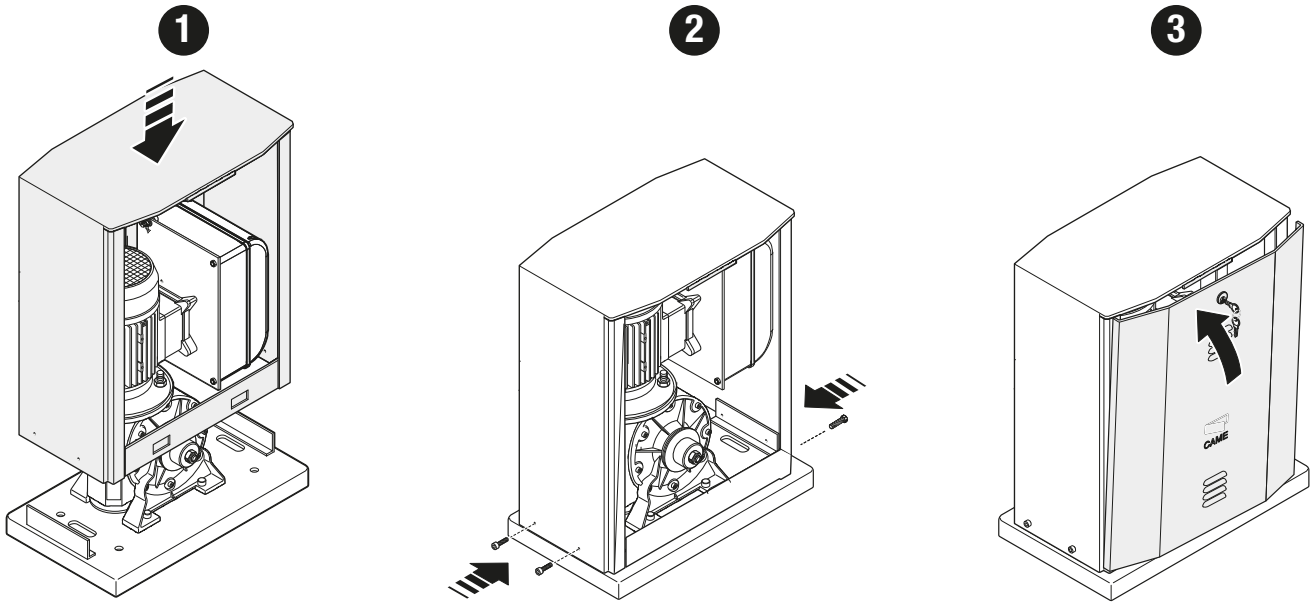

PAIRED OPERATION

Two connected operators are controlled with one command.

Electrical connections

❶ Reverse the SLAVE operator motor and limit switches phases.
❷ Connect the two electronic boards.

📖 The devices and accessories must be connected to the control board which will be set as the MASTER.

📖 For information on connecting the electrics for the devices and accessories, please see the “ELECTRICAL CONNECTIONS” section.

📖 For simultaneous radio control on both operators, store the user on the second master channel.

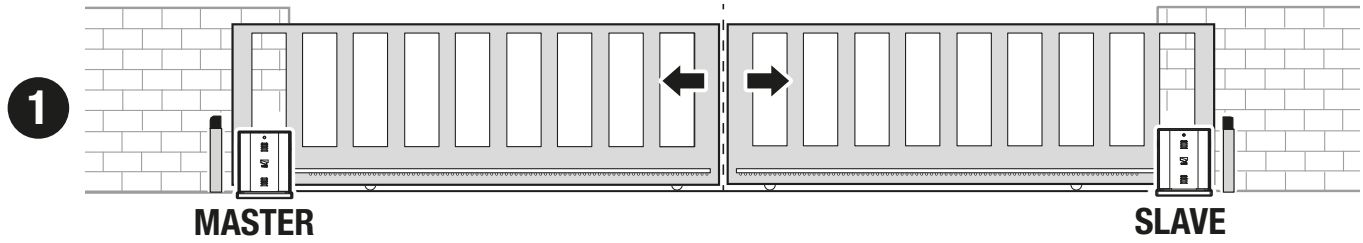

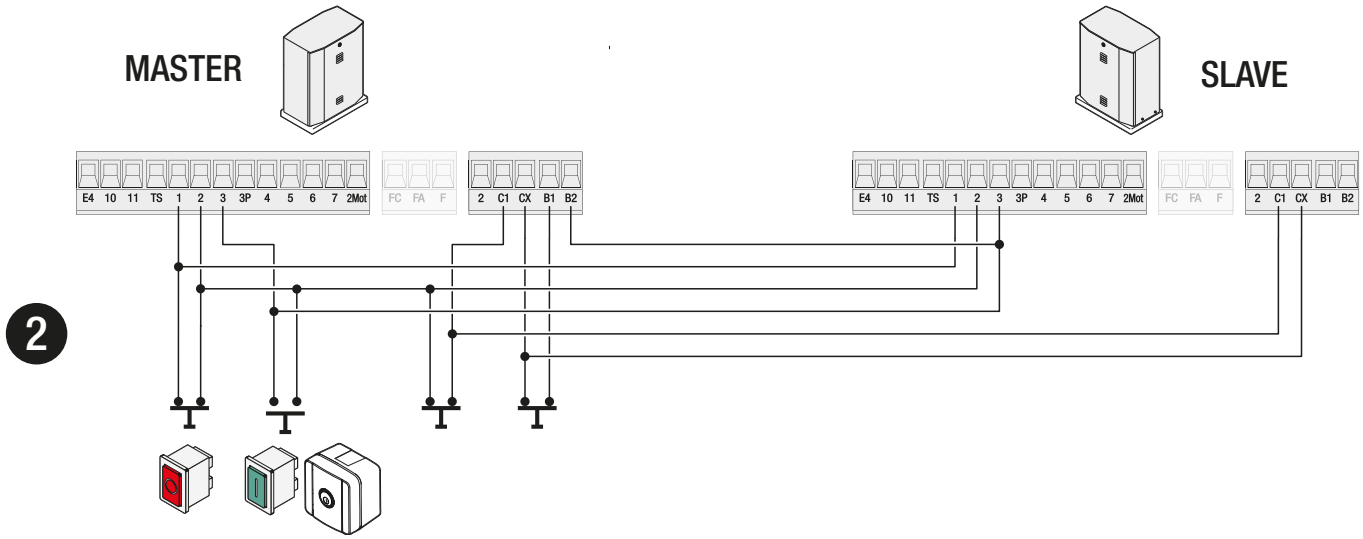

Programming

Select the functions and settings on both electronic boards.

📖 DIP-switches 1 and 3 must be ON.

📖 The gate only closes automatically.

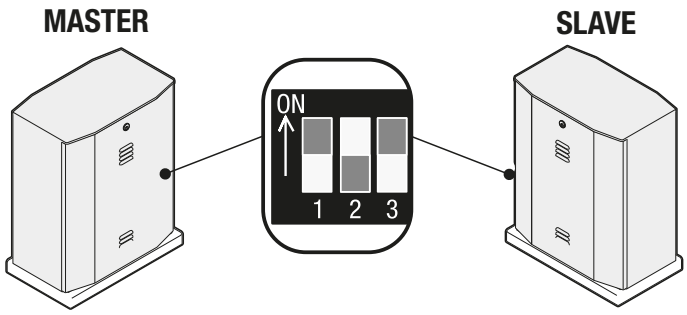

Saving users

All save user operations must be performed only on the control board set as the MASTER.

Operating modes

❶ MASTER OPENING command
Only the operator configured as the MASTER will open.

The open gate button on the transmitter must be stored on channel CH1 on the gearmotor.

❷ Open command
Both the MASTER and SLAVE operator open.

The open both gates button on the transmitter must be stored on channel CH2 on the gearmotor.

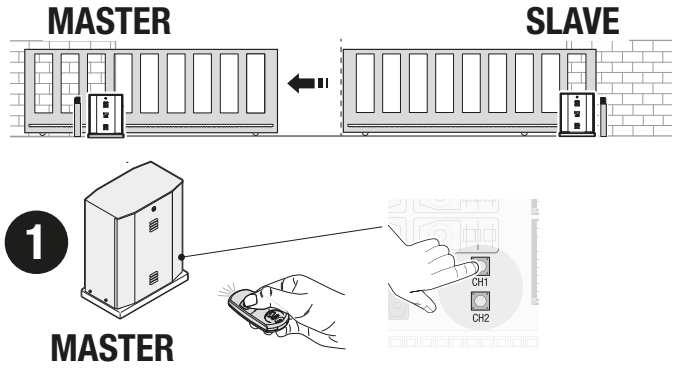

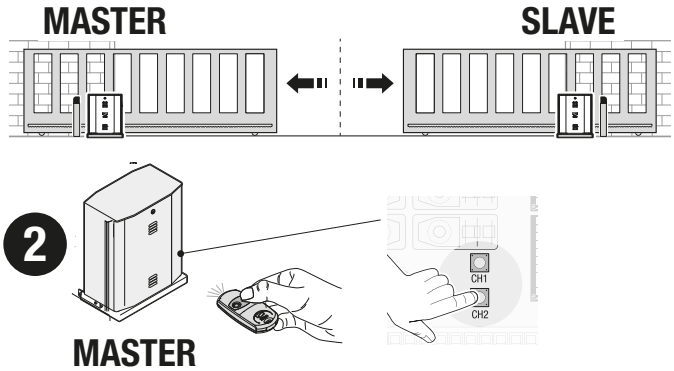

AFFIX THE PRODUCT LABEL
FROM THE BOX HERE

CAME

CAME.COM

CAME S.P.A.
Via Martiri della Libertà, 15
31030 Dosson di Casier
Treviso - Italy
Tel. (+39) 0422 4940
Fax (+39) 0422 4941
info@came.com - www.came.com